390p alone -0.75dB @1MHz

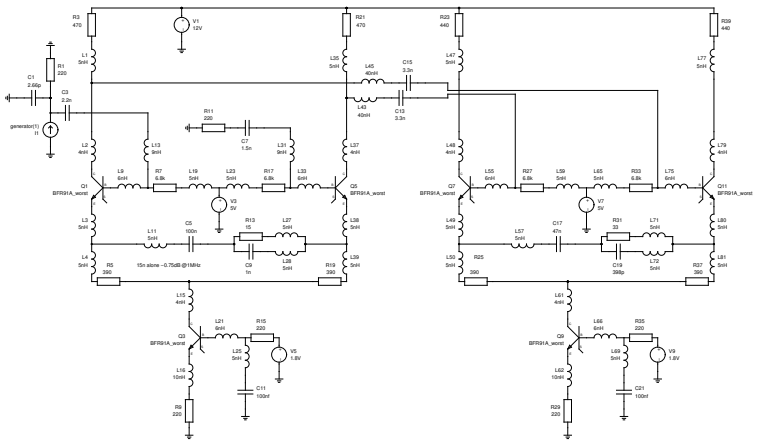

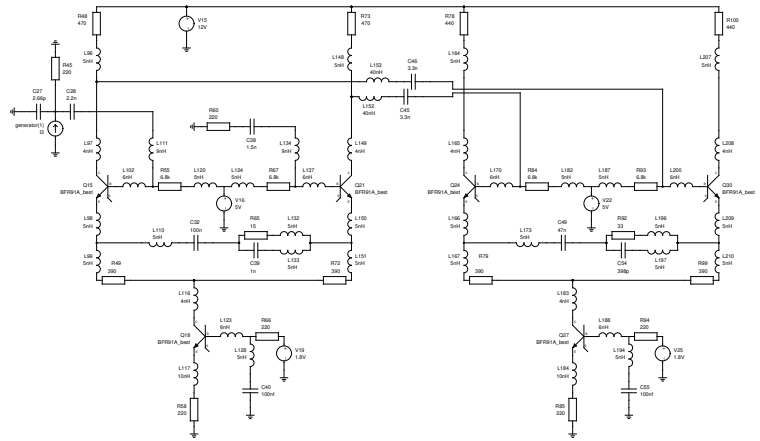

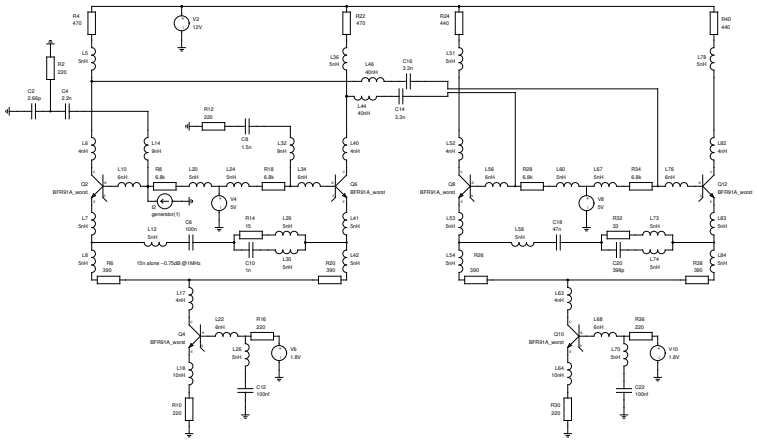

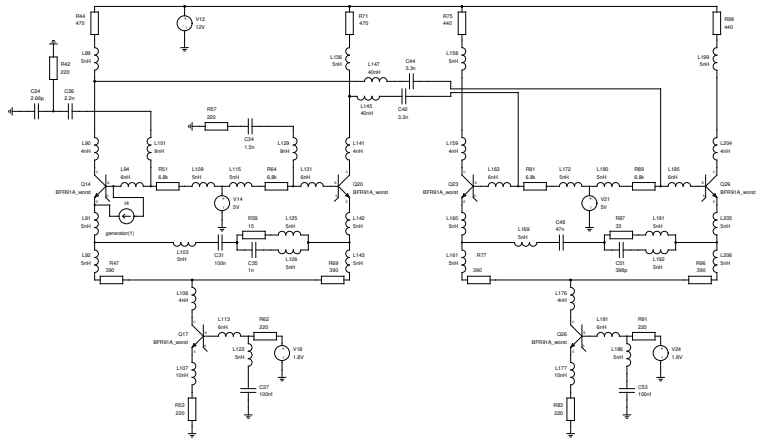

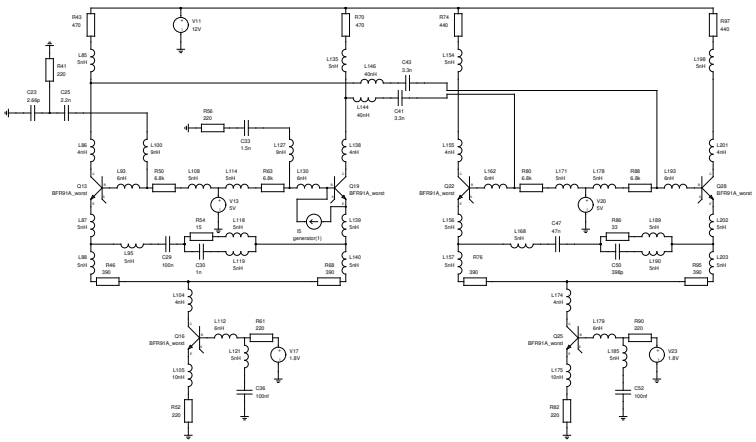

A1	Gnucap directive	.include sim/models/bfr90_worst.lib
A10	Gnucap directive	.include sim/models/bfr90_best.lib
A11	Gnucap directive	.include sim/models/bfr91_worst.lib
A12	Gnucap directive	.include sim/models/bfr91_best.lib
A2	Gnucap directive	.include sim/models/bfr91a_worst.lib
A3	Gnucap directive	.include sim/models/bfr91a_best.lib
A4	Gnucap options	numdgt=9 out=10000 clobber nstray
A5	Gnucap directive	.op
A6	Gnucap directive	.print ac imdb(L2) imdb(L97) ip(L2) ip(L97)
A7	Gnucap directive	.ac 1% 9.5G Dec 50 -sim/stage1.data Basic Quiet
A8	Gnucap directive	.print ac im(L2) im(L6) im(L90) im(L86)
A9	Gnucap directive	.ac 1Meg 10Meg *10 -sim/stage12.data Basic Quiet