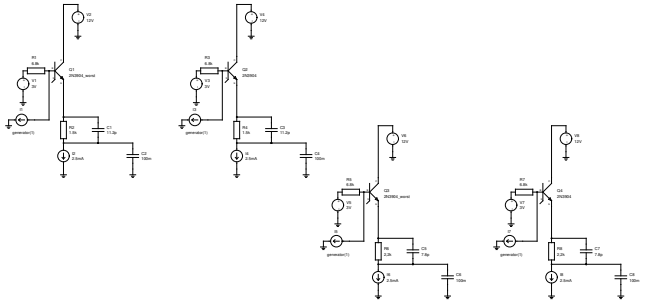

A1	Gnucap directive	.include sim/models/2n3904_wend.lib
A2	Gnucap directive	.include sim/models/ba343x_wend.lib
A3	Gnucap directive	.include sim/models/2n3904.lib
A4	Gnucap options	noredg=3 out=10000 date=tdev rdelay
A5	Gnucap directive	op
A6	Gnucap directive	print ac lmdb(V2) lmdb(V4) lmdb(V6) lmdb(V8) ip(V2) ip(V4) ip(V6) ip(V8)
A7	Gnucap directive	.ac 600k 800Meg Dec 20 <sim/spread.data flass Quiet

2N3904 basic long tail pair

TITLE			
FILE	To be released under GFDL	REVISION	2008/1007
Page	1 of 1	2008/0810	Clark