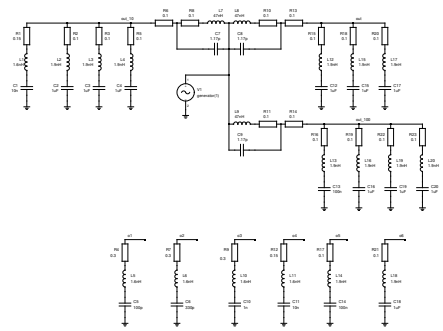

A5	Dinsap direction	print as vmdb(out) vmdb(out_10) vmdb(out_100)
A7	Dinsap direction	ac 1.07Meg 902Meg Dec 128 vcm/vmdmdg_filter.data Basic Gain!
A8	Dinsap direction	op

Ronja Ceramic Capacitor Simulation

TITLE	Ronja Ceramic Capacitor Simulation		
FILE	Released under GPSL	Revision	20080308
Page	1 of 1	Drawn by	Clark