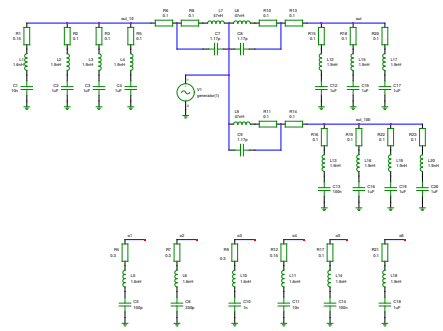

A6	Dinsep direction	print as vmdb(out) vmdb(out_10) vmdb(out_100)
A7	Dinsep direction	ac 1.01Meg 902Meg Dec 128 vsim/vtrending_filter.data Basic Quiet
A8	Dinsep direction	op

Ronja Ceramic Capacitor Simulation

TITLE			
FILE	Released under OFDL	REVISION	20080308
PAGE	1 OF 1	DRAWN BY	Clark