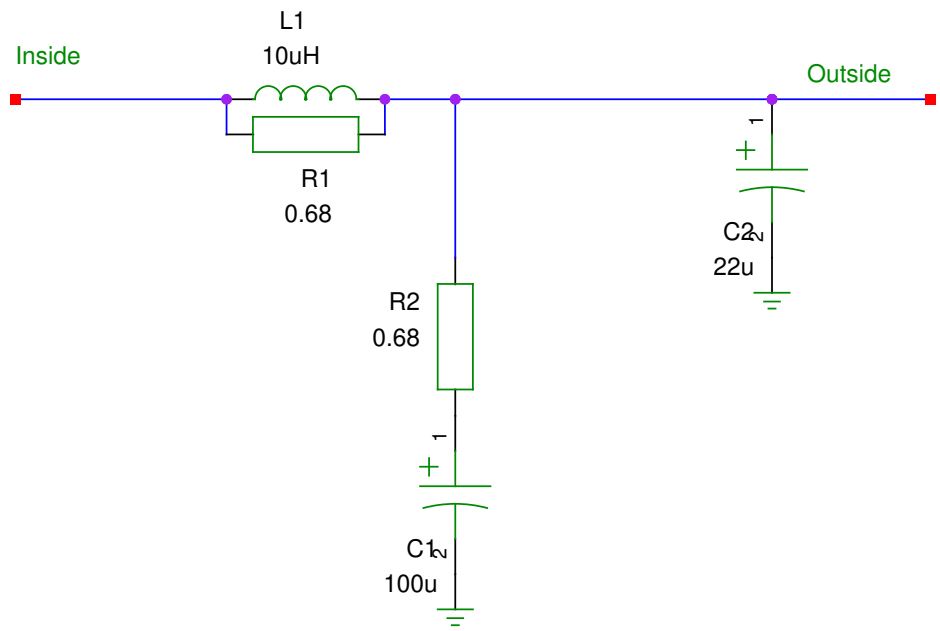

Bad Ronja RX Power Filter

TITLE

FILE:	To be released under GFDL	REVISION:	20051122
PAGE 1 OF 1		DRAWN BY:	Clock