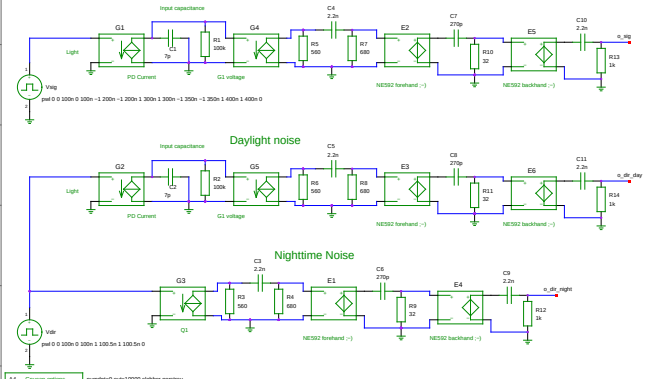


| | | |
|---|---|---|
| A4 | Gnucap options | numdigt=9 out=10000 clobber nonstray |
| A5 | SPICE directive | .print tran v(Vsig) v(o_sig) v(Vdir) v(o_dir_day) v(o_dir_night) |
| A7 | Gnucap directive | .transient 0 2u 0.5n >xsim/rx_response.data Basic Quiet |
| A6 | Gnucap directive | .op |

TITLE: Ronja RX Impulse Response

| | | | |
|---|---|---|---|
| FILE: To be released under GFDL | | REVISION: | 20051511 |
| PAGE 1 | OF 1 | DRAWN BY: | Clock |