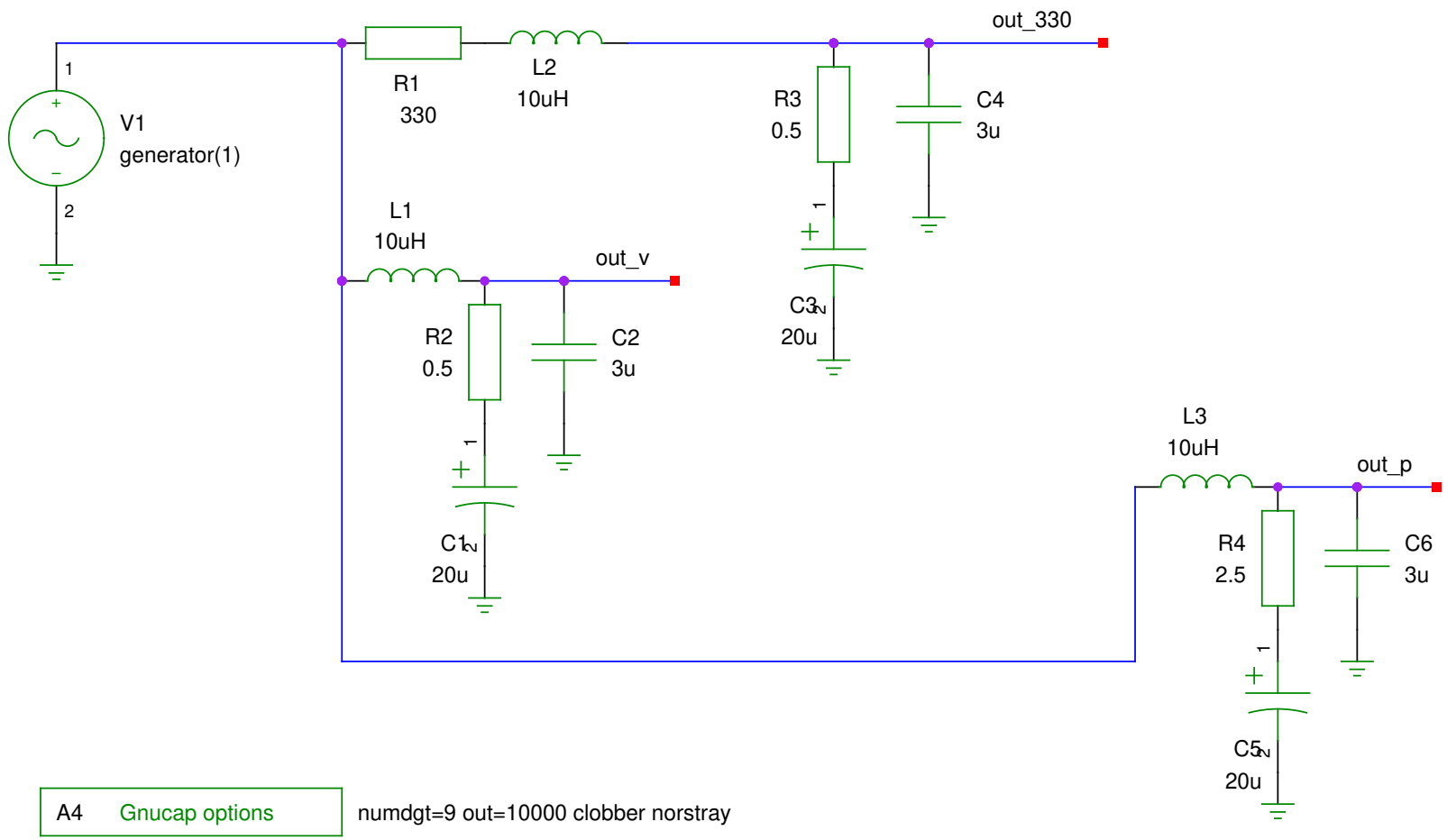

A4	Gnucap options	numdgt=9 out=10000 clobber norstray
A5	Gnucap directive	.print ac vmdb(out_v) vmdb(out_330) vmdb(out_p)
A7	Gnucap directive	.ac 10 1Meg Dec 50 >sim/rx_filter3.data Basic Quiet
A6	Gnucap directive	.op

Ronja RX Power Filters

TITLE

FILE:	Released under GFDL	REVISION:	20060228
PAGE 1 OF 1		DRAWN BY:	Clock