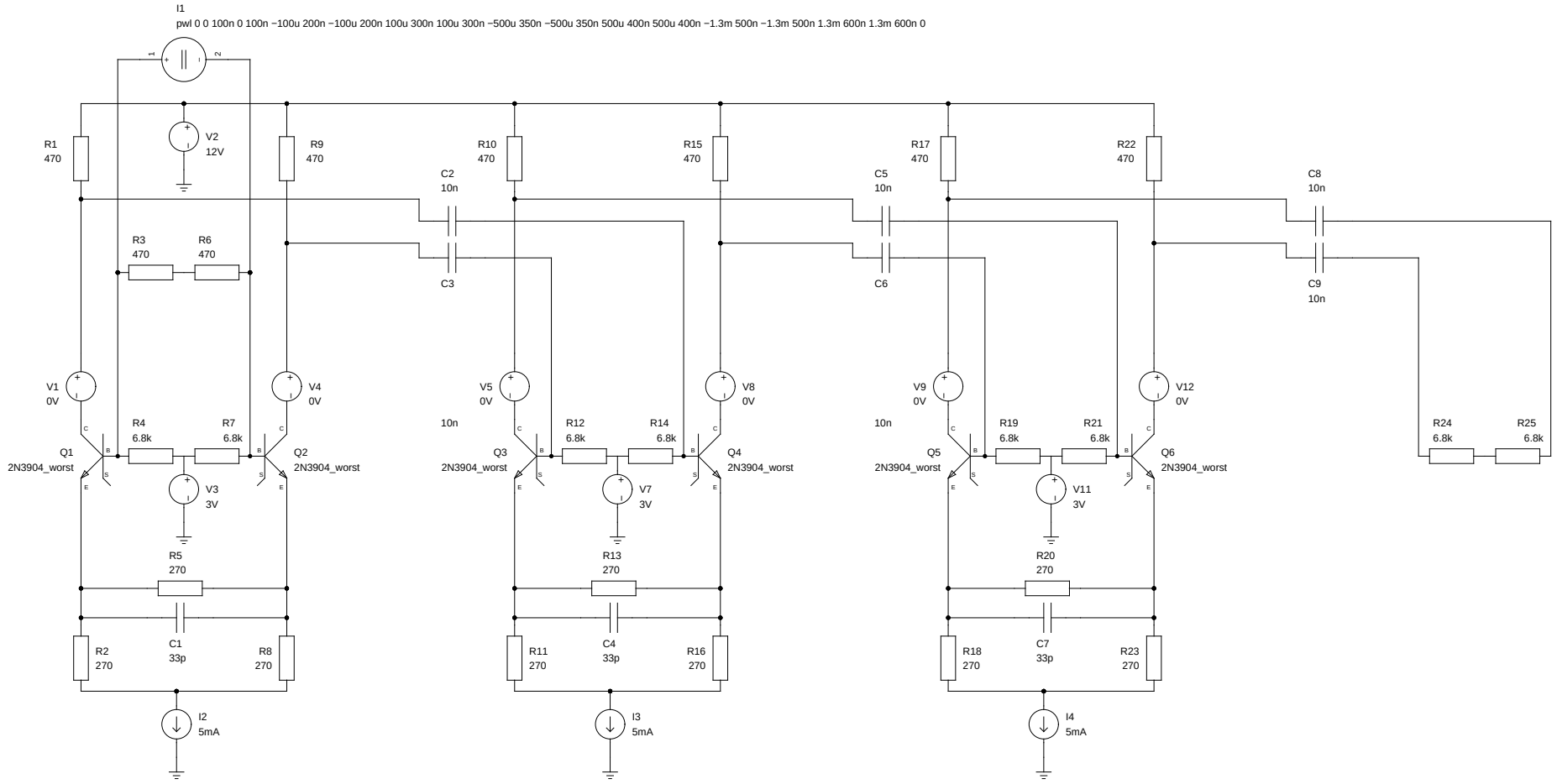

A1	Gnucap directive	.include sim/models/2n3904_worst.lib
A2	Gnucap directive	.include sim/models/2n3904.lib
A3	Gnucap options	numdgt=9 out=10000 clobber rstray
A4	Gnucap directive	.print tran i(I1) v(I1) i(V1) i(V4) i(V5) i(V8) i(V9) i(V12) V(R1) V(R9) V(R10) V(R15) V(R17) V(R22)
A5	Gnucap directive	.op
A6	Gnucap directive	.transient 0 1u 250p >sim/rx_experimental.data Basic Quiet cold

TITLE

FILE:

PAGE OF

REVISION:

DRAWN BY: