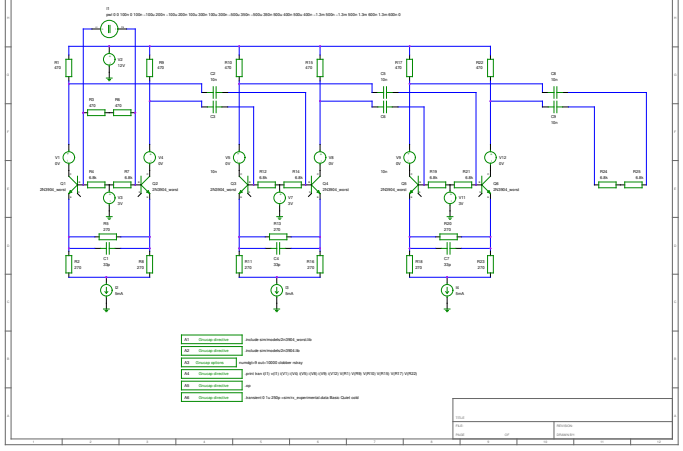
I1
pwl 0 0 100n 0 100n -100u 200n -100u 300n 100u 300n 100u 300n -100u 300n -100u 300n 100u 400n 100u 400n -1.3m 500n -1.3m 600n 1.3m 600n 0
R1 470
V2 12V
R8 470
R10 470
R13 470
R17 470
R22 470
C2 10n
C5 10n
C8 10n
R3 470
R6 470
C3
C6
C9 10n
V1 0V
V4 0V
V5 0V
V8 0V
V9 0V
V12 0V
Q1 2N2904_semi
R4 6.8k
R7 6.8k
Q2 2N2904_semi
Q3 2N2904_semi
R12 6.8k
R15 6.8k
Q4 2N2904_semi
Q5 2N2904_semi
R19 6.8k
R21 6.8k
Q6 2N2904_semi
R24 6.8k
R25 6.8k
V3 3V
V7 3V
V11 3V
R9 270
R13 270
R20 270
R2 270
C1 33p
R8 270
R11 270
C4 33p
R16 270
R18 270
C7 33p
R23 270
I2 5mA
I3 5mA
I4 5mA
A1 Group directive include sim/models/2n2904_semi.lib
A2 Group directive include sim/models/2n2904.lib
A3 Group options numbers 8 auto 10000 oldstep relay
A4 Group directive print bias (I1) v(I1) (V1) (V4) (V5) (V8) (V9) (V12) V(R1) V(R6) V(R10) V(R15) V(R17) V(R22)
A5 Group directive rep
A6 Group directive transient 0 1u 200p vcmin_experimental data Basic Quiet solid
TITLE
FILE:
REVISION:
PAGE: OF
DRAWN BY: