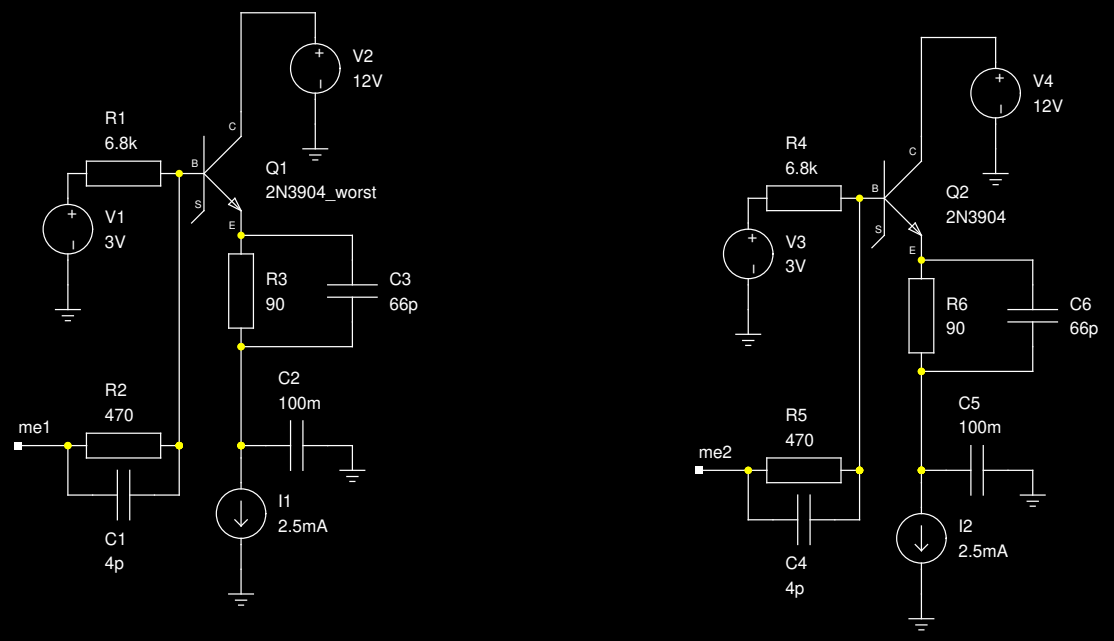

A1	Gnucap directive	.include sim/models/2n3904_worst.lib
A2	Gnucap directive	.include sim/models/2n3904.lib
A3	Gnucap options	numdgt=9 out=10000 clobber rstray
A4	Gnucap directive	.print ac zm(me1) zm(me2) zr(me1) zr(me2) zi(me1) zi(me2) zp(me1) zp(me2)
A5	Gnucap directive	.op
A6	Gnucap directive	.ac 120k 950Meg Dec 40 >sim/millerin.data Basic Quiet

2N3904 Long Tail Pai With RC Emitter Degenration: Input Impedance

TITLE

FILE:	To be released under GFDL	REVISION:	20081007
PAGE 1 OF 1		DRAWN BY:	Clock