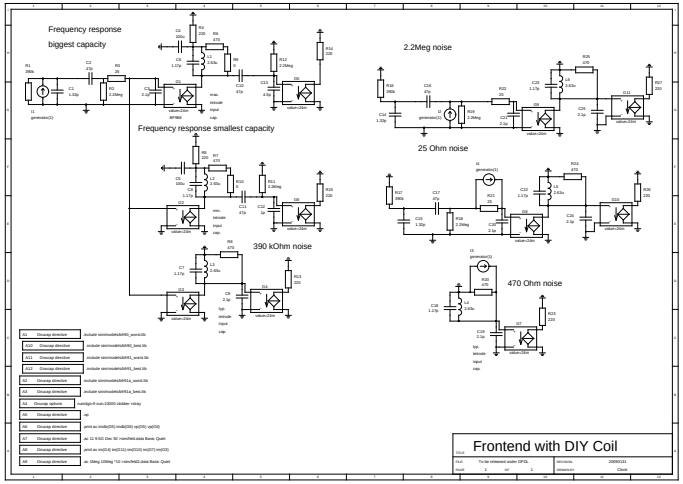

A1	Gnucap directive	include sim/models/bf490_word.lib
A10	Gnucap directive	include sim/models/bf490_best.lib
A11	Gnucap directive	include sim/models/bf491_word.lib
A12	Gnucap directive	include sim/models/bf491_best.lib
A2	Gnucap directive	include sim/models/bf491a_word.lib
A3	Gnucap directive	include sim/models/bf491a_best.lib
A4	Gnucap options	noinitjct-ft out=10000 clobber noisy
A5	Gnucap directive	op
A6	Gnucap directive	print ac v(nsb)[20] v(nsb)[30] vp[20] vp[30]
A7	Gnucap directive	ac 11 9.00 Dec 50 +sim/field.data Basic Quiet
A8	Gnucap directive	print ac vn[3:4] vn[11:12] vn[21:22] vn[27:28] vn[33]
A9	Gnucap directive	ac 1Meg 100Meg *10 +sim/field.data Basic Quiet

Frontend with DIY Coil

File:	To be released under GPSL	Revision:	20090101
Sheet:	1 of 1	Date(s):	Clock