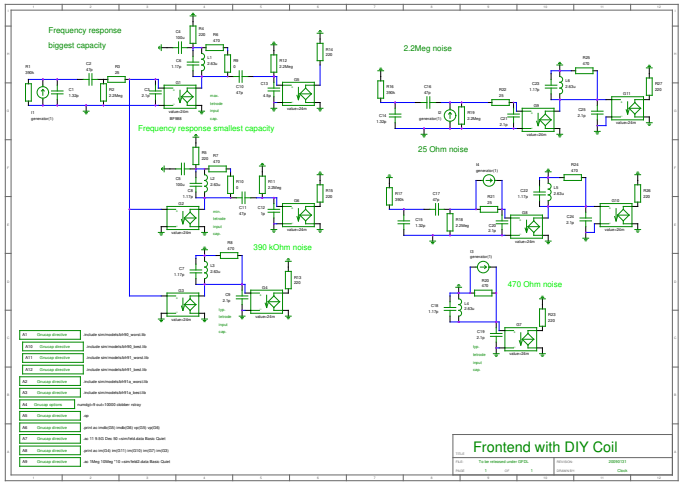
Frequency response
biggest capacity
Frequency response smallest capacity
390 kOhm noise
2.2Meg noise
25 Ohm noise
470 Ohm noise
Frontend with DIY Coil