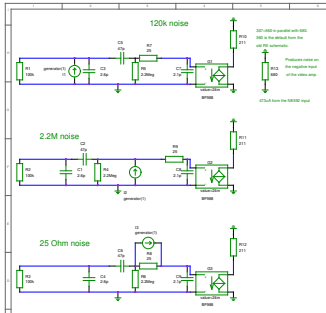

A1	Gnuspp directive	include sim/models/bh90_wand.lib
A10	Gnuspp directive	include sim/models/bh90_band.lib
A2	Gnuspp directive	include sim/models/bh91_wand.lib
A3	Gnuspp directive	include sim/models/bh91_band.lib
A4	Gnuspp directive	include sim/models/bh91a_wand.lib
A5	Gnuspp directive	include sim/models/bh91a_band.lib
A6	Gnuspp options	numlight=8 out=10000 clockwise noisy
A7	Gnuspp directive	rep
A8	Gnuspp directive	print as ins(D1) ins(D2) ins(D3)
A9	Gnuspp directive	as 100kg 100kg ~10 ~ cm/s/s data Basic Quiet

DIM	Frontend with DIY Coil		
FILE	To be released under GPSL	REVISION	20090131
PAGE	1 OF 1	DRAWN BY	Clock