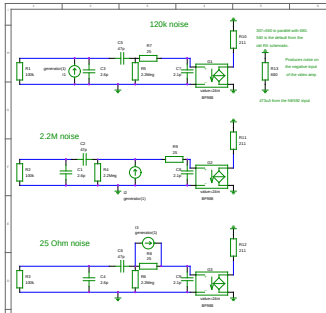

337+593 in parallel with 593.
593 is the default from the
old PE schematic.

R13
593

Produces noise on
the negative input
of the vatten amp.

47Sub from the N8192 input

A1	Osscap directive	include ~/sim/models/bf992_worst.lib
A10	Osscap directive	include ~/sim/models/bf992_best.lib
A2	Osscap directive	include ~/sim/models/bf992_worst.lib
A3	Osscap directive	include ~/sim/models/bf992_best.lib
A4	Osscap directive	include ~/sim/models/bf992a_worst.lib
A5	Osscap directive	include ~/sim/models/bf992a_best.lib
A6	Osscap option	numdigit=8 out=10000 clobber noisy
A7	Osscap directive	op
A8	Osscap directive	print ac ins(D1) ins(D2) ins(D3)
A9	Osscap directive	ac 100meg 300meg *10 noise/ins data lfasco Quiet

Frontend with DIY Coil

File:	To be released under GPGL	Revision:	20090101
Sheet:	1 of 1	Drawn by:	Chuck