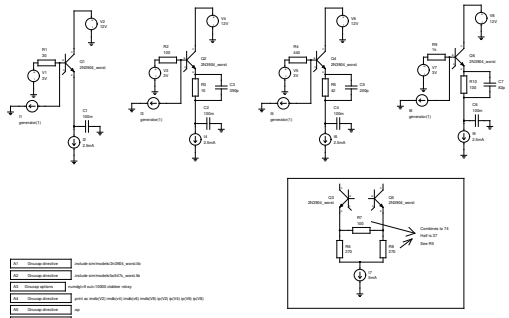





| | | |
|---|---|---|
| A1 | Gnucap directive | include sim/models/2n2904_semi.lib |
| A2 | Gnucap directive | include sim/models/lm317k_semi.lib |
| A3 | Gnucap options | nonlinear.ft auto=10000 stabber relevy |
| A4 | Gnucap directive | print ac imag(v(2)) imag(v(4) imag(v(6) ip(v(3) ip(v(5) ip(v(7)) |
| A5 | Gnucap directive | zap |
| A6 | Gnucap directive | ac 400k 60Meg Dec 20 >sim/ssfpimp.data Basic Quiet |

2N2904 Long Tail Pair: Various Emitter Degeneration RC Networks

| | | | |
|---|---|---|---|
| TITLE: | | | |
| FILE: | To be released under GPEL | REVISION: | 2008/1007 |
| Sheet | 1 of 1 | DRAWN BY: | Clark |