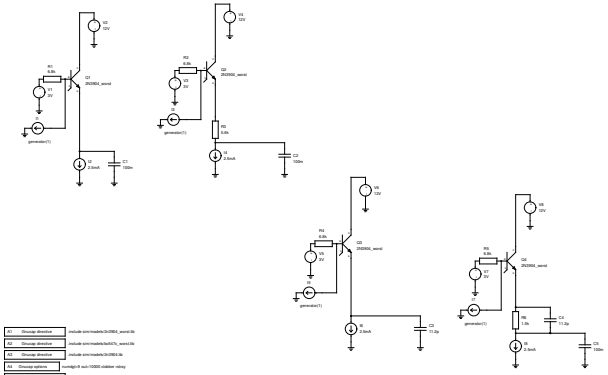

A1	Gnucap directive	.include sim/models/2N3904_semi.lib
A2	Gnucap directive	.include sim/models/bc547c_semi.lib
A3	Gnucap directive	.include sim/models/2n3904.lib
A4	Gnucap options	.options ft auto 10000 noditer noisey
A5	Gnucap directive	.print ac lmnl(v(12) lmnl(v(14) lmnl(v(16) lmnl(v(18) ip(v(12) ip(v(14) ip(v(16) ip(v(18)
A7	Gnucap directive	.ac 600k 800Meg Dec 30 <sim/basic_cell.data Basic Quiet

A6	Gnucap directive	.op	

2N3904 basic long tail pair

TITLE			
FILE	To be released under GPDL	REVISION	2008/08/07
Sheet	1 of 1	Drawn by	Clark