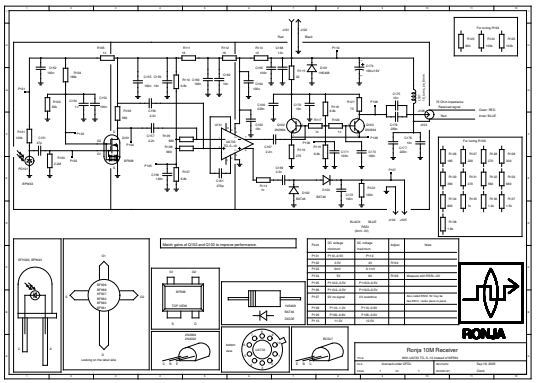
Match gains of Q102 and Q103 to improve performance
Ronja 10M Receiver
RONJA