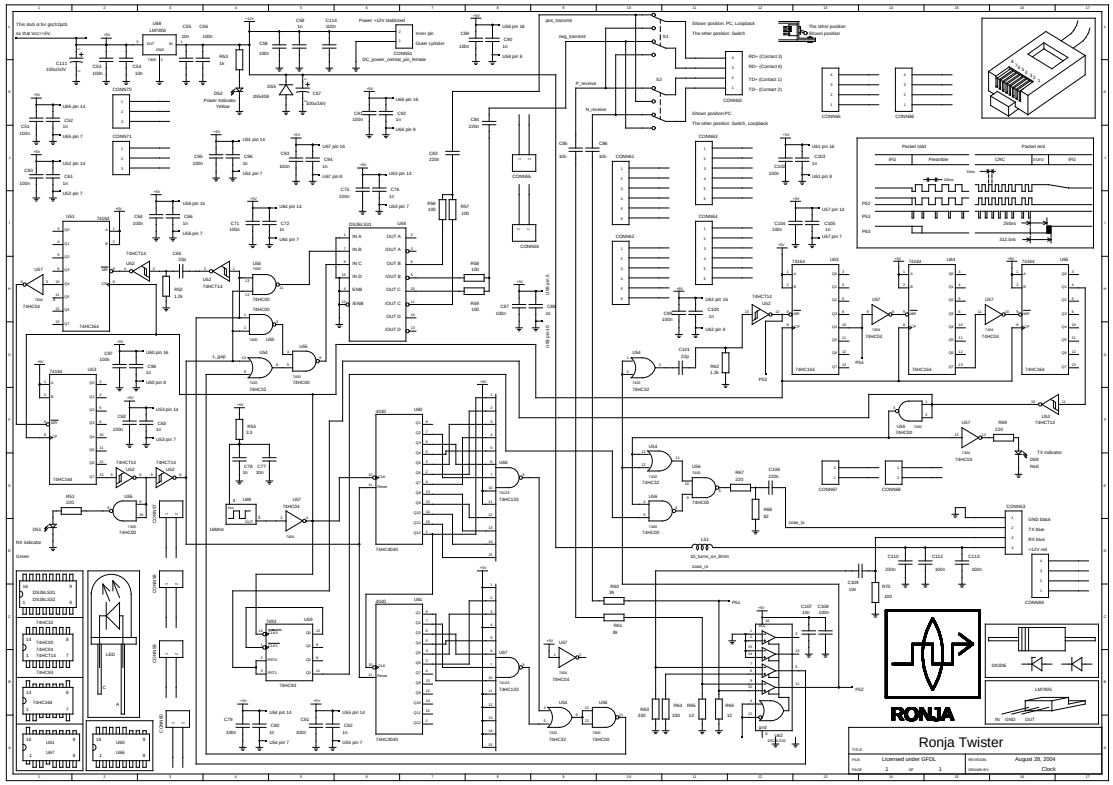
Ronja Twister
Licensed under GFDL
August 28, 2004
Clock
RONJA