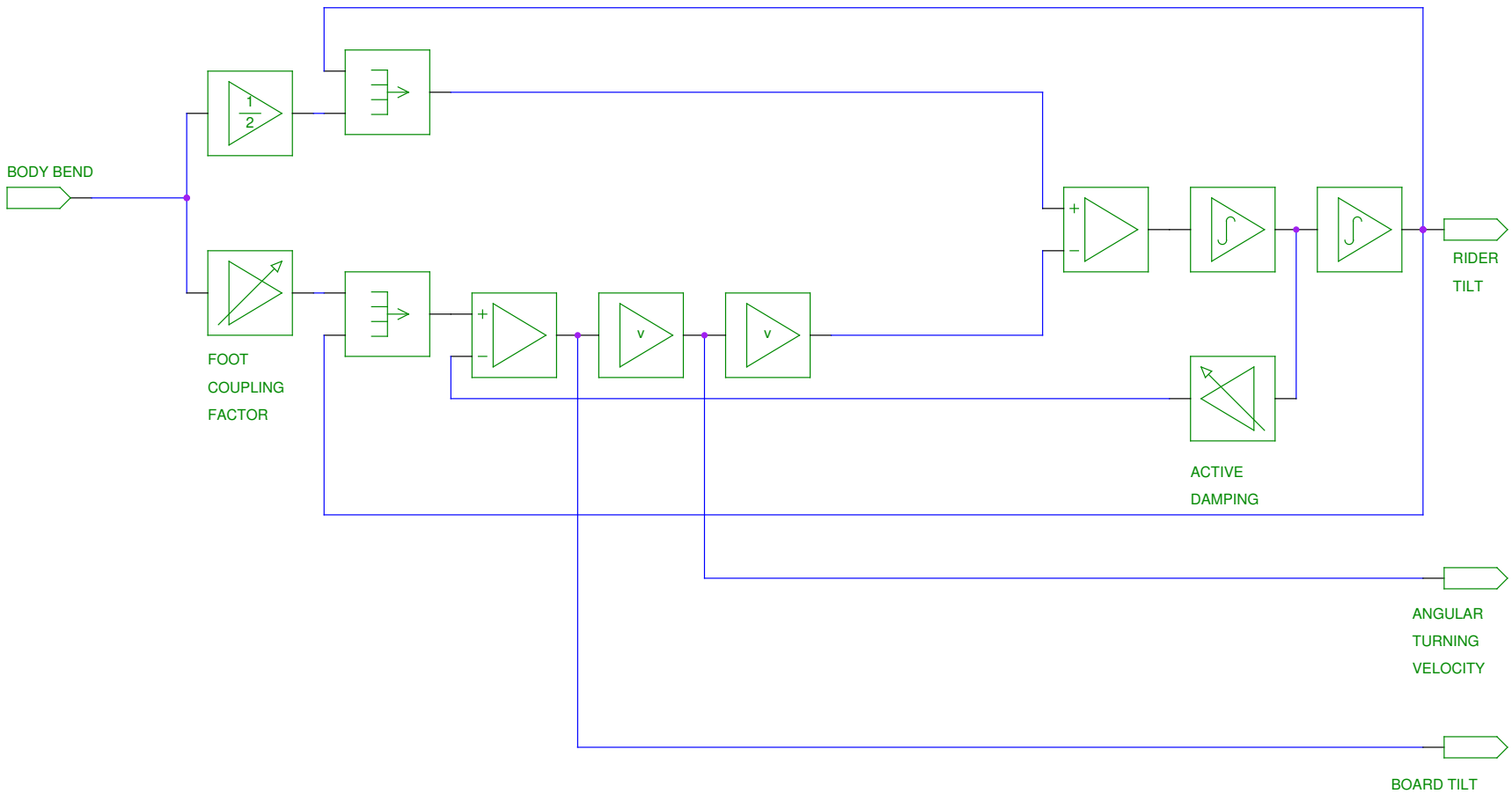

TITLE: Second Moment Controlled Surfer Schematic	
FILE:	REVISION:
PAGE OF	DRAWN BY: