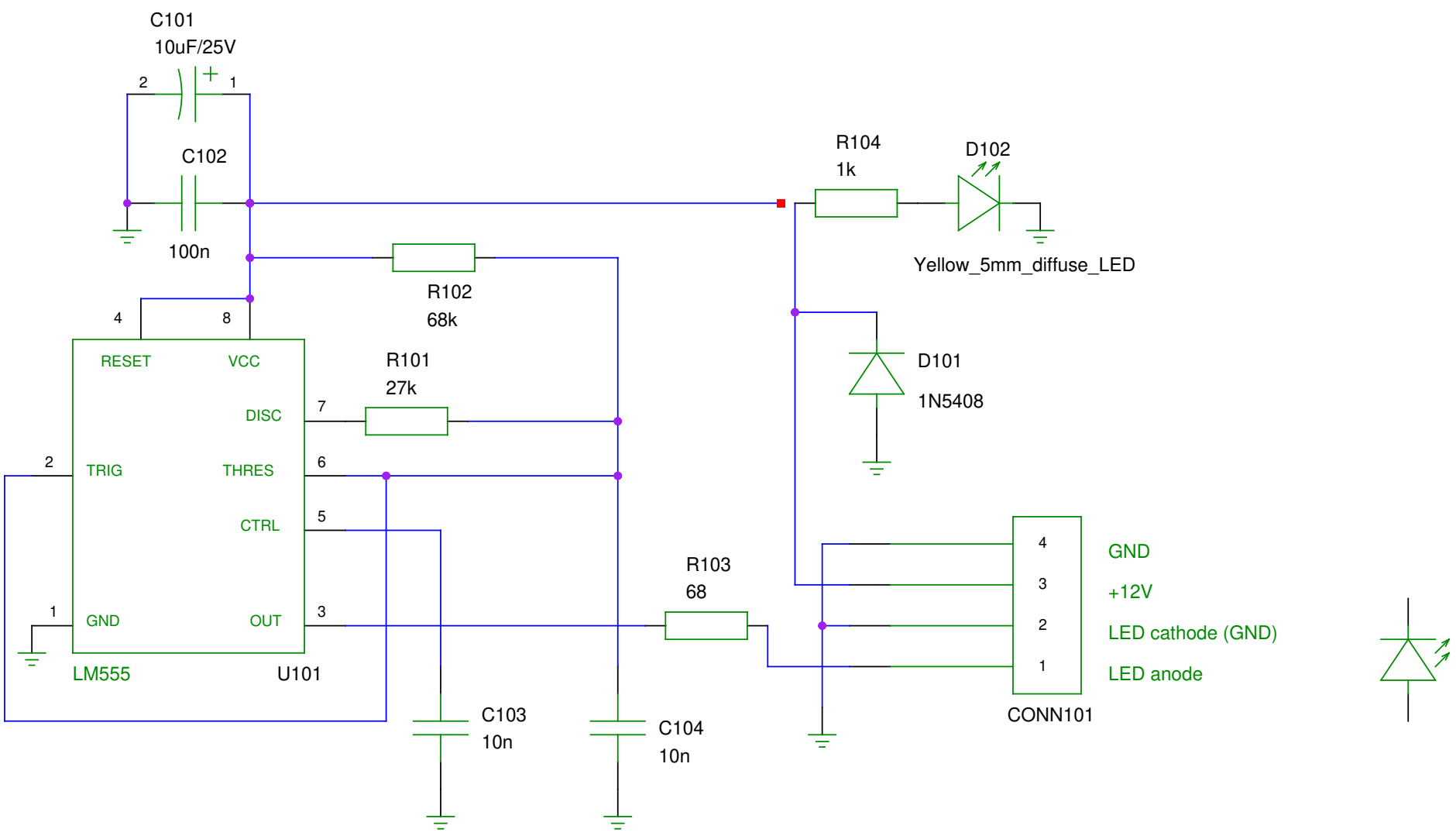

Ronja Starquake

, LF optical beacon

TITLE

FILE:	Licensed under GFDL	REVISION:	20041231
PAGE 1 OF 1		DRAWN BY:	Clock, Twibright Labs