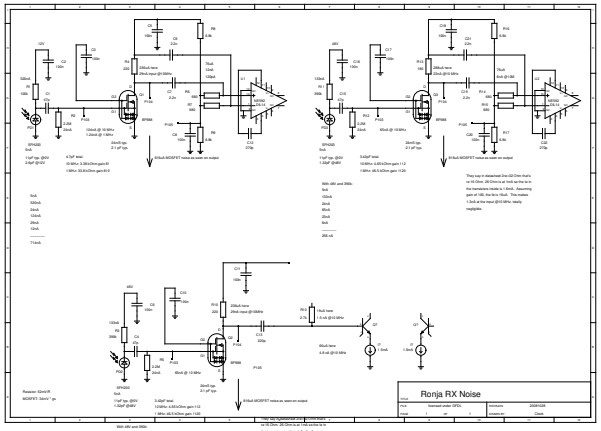
Ronja RX Noise
Title
Ronja RX Noise
Size
A4
Date
Thursday, October 19, 2006
Sheet
1
of
1
Revision
20061019
Drawn by
Claes
Resistor: 52mV/R
MOSFET: 24mV * pF
1 * 1pF (1pF) @MHz
1 * 100nF (100nF) @MHz
5.6pF total
12.5MHz: 4.65kOhm gain 1:2
1.8MHz: 20.5kOhm gain 1:10
24mV/pF typ.
2.1 pF typ.
BF998
BF998 MOSFET noise as seen on output
5mA
120mA
24mA
24mA
24mA
5mA
———
233 uA
This way to datasheet 2m=52 Ohm that's
ca 10 Ohm. 20 Ohm is at 1mA so the 1k in
the transistors needs to 1.6mA. Assuming
gain of 100, the 8k is 16uA. This makes
1.3mA at the input @10 MHz, totally
negligible.