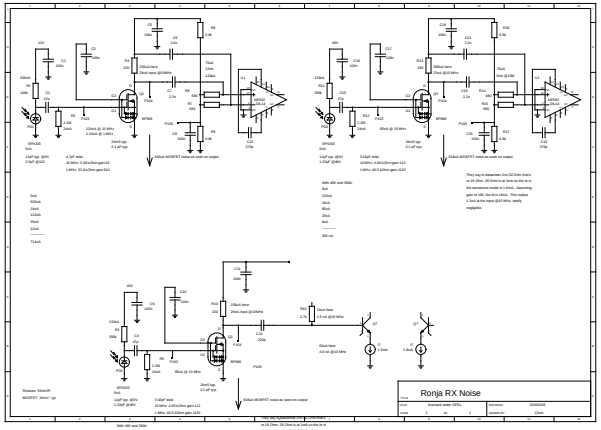
Ronja RX Noise
Licensed under GPDL
2009/02/05
Ronja
Version:
Author:
Sheet:
1
of
1
Size:
A
Date:
Reviewer: 12mw/R
MOSFET: 24mV / ps
Tony say in datasheet 2nn-G2 Ohm that's
no 50 Ohm. 20 Ohm is at 1mA so the in
the transistors made is 1.0mA. Assuming
gain of 100, the 0 is 10uA. This makes
1.5nA at the input @10 MHz. really
negligible.
Tony say in datasheet 2nn-G2 Ohm that's
no 50 Ohm. 20 Ohm is at 1mA so the in
the transistors made is 1.0mA. Assuming
gain of 100, the 0 is 10uA. This makes
1.5nA at the input @10 MHz. really
negligible.
0.5uA MOSFET noise as seen on output
0.5uA MOSFET noise as seen on output
0.5uA MOSFET noise as seen on output
With 48V and 390k
5uA,
110nA,
24nA,
18nA,
24nA,
5uA,
———
258 nA
With 48V and 390k
5uA,
110nA,
24nA,
18nA,
24nA,
5uA,
———
258 nA
With 48V and 390k
5uA,
520nA,
24nA,
110nA,
24nA,
12nA,
———
754nA