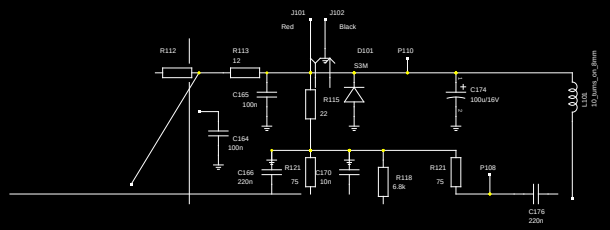


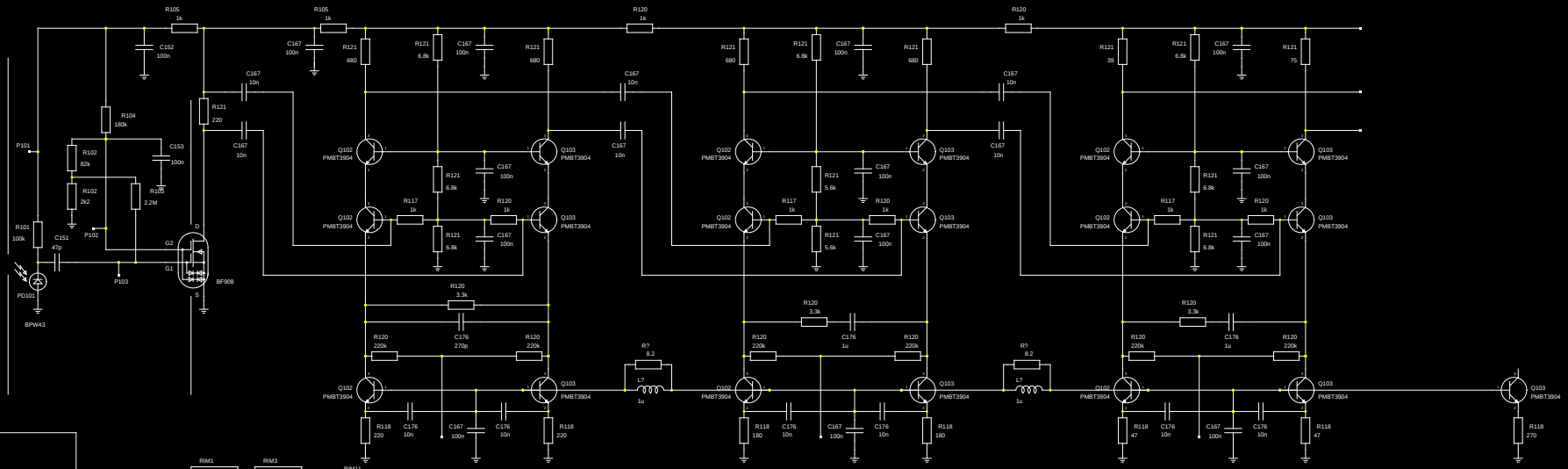


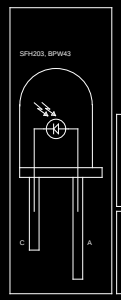


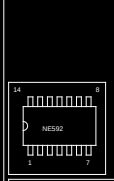


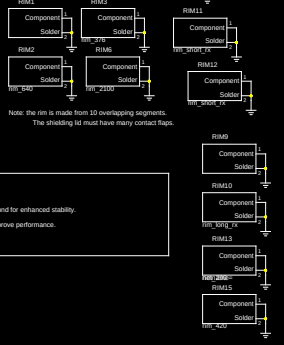


Note: the rim is made from 10 overlapping segments.
The shielding lid must have many contact flaps.

Connect pins 2,6,9,13 of U101 to ground for enhanced stability.

Match gains of Q102 and Q103 to improve performance.

RONJA

# Ronja 10M Receiver SMD

to be licensed under GFDL

20061028

1 1 Clock

| Point | DC voltage minimum | DC voltage maximum | Adjust | Note |
|---|---|---|---|---|
| P101 | P110−0.7V | P110 | | |
| P102 | 3.5V | 4V | R104 | |
| P103 | 0mV | 0.1mV | | |
| P104 | 5V | 6V | R106 | Measure with RSSI <2V |
| P105 | P110/2−0.5V | P110/2+0.5V | | |
| P106 | P110/2−0.7V | P110/2+0.5V | | |
| P107 | 0V no signal | 4V overdrive | | Also called RSSI. 0V may be like 65mV, varies piece to piece |
| P108 | P110−1.3V | P110−0.9V | | |
| P109 | P106−0.8V | P106−0.6V | | |
| P110 | 11.5V | 12.5V | | |