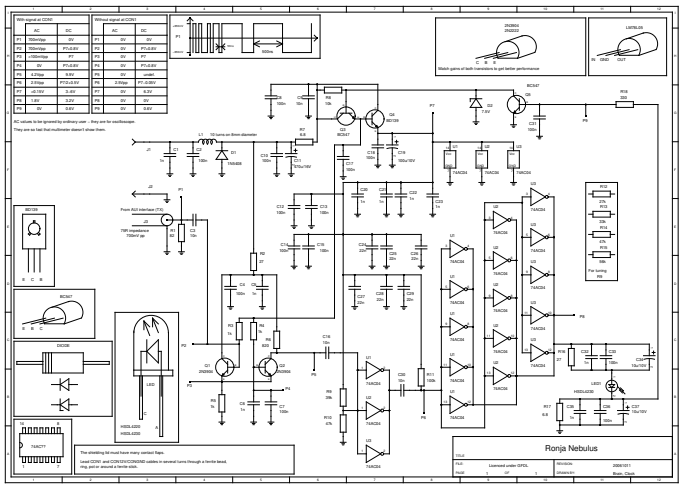

Ronja Nebulus
Licensed under GPL3.
20081011
Brian Chan
The shielding lid must have many contact flaps.
Lead CON1 and CON3/4/5/CON6/NAND cables in several turns through a ferrite bead.
ring parts around a ferrite stick.
Shield pins of both transistors to get better performance
From AVR interface (TX)
75R impedance
700mV pp
Fine tuning
HSDL-4230