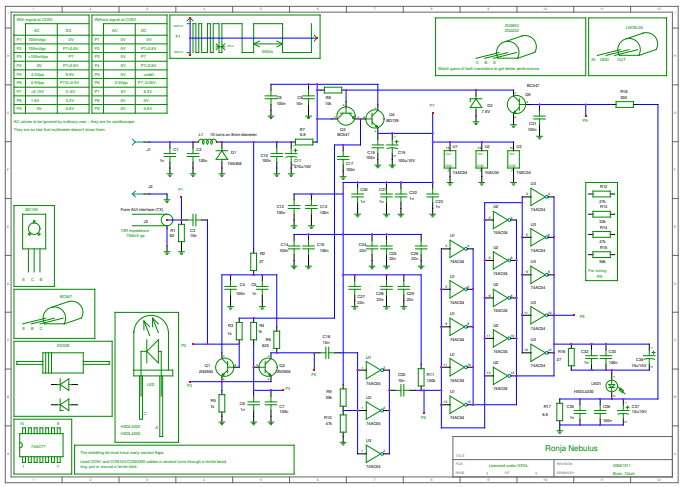

With signal at GDN1
AC
DC
P1 | 250mVpp | 0V
P2 | 150mVpp | P1+0.6V
P3 | 100mVpp | P1
P4 | 0V | P1+0.6V
P5 | 4.2Vpp | 9.8V
P6 | 2.5Vpp | P7+0.6-0.9V
P7 | -0.15V | 3.4V
P8 | 1.6V | 3.2V
P9 | 0V | 3.4V
With signal at GDN2
AC
DC
P1 | 0V | 0V
P2 | 0V | P1+0.6V
P3 | 0V | P7
P4 | 0V | P1+0.6V
P5 | 0V | unstd
P6 | 2.5Vpp | P7-0.9V
P7 | 0V | 3.2V
P8 | 0V | 0V
P9 | 0V | 3.4V
AC values to be ignored by ordinary users - they are for oscilloscope.
They are so bad that multimeter doesn't show them.
Slotch gains of both transistors to get better performance
Ronja Nebulus
Licensed under GPL3.
2008/1011
Bruno Clouet