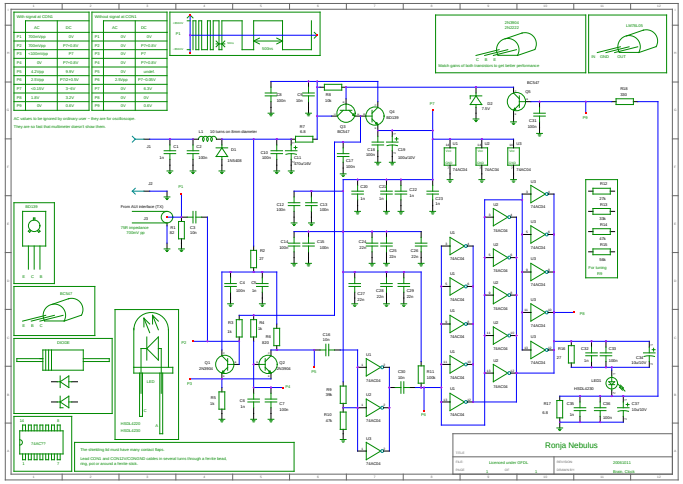
With signal at CON1
AC
DC
P1 350mVpp 0V
P2 350mVpp P1+0.6V
P3 100mVpp P2
P4 0V P3+0.6V
P5 2.75Vpp 9.6V
P6 2.5Vpp P2/2+0.5V
P7 -0.15V 3.4V
P8 1.8V 3.2V
P9 0V 3.4V
Without signal at CON1
AC
DC
P1 0V 0V
P2 0V P1+0.6V
P3 0V P2
P4 0V P3+0.6V
P5 0V 0V
P6 2.5Vpp P7-0.6V
P7 0V 9.6V
P8 0V unset
P9 0V 0.6V
AC values to be ignored by ordinary user.
They are so bad that multimeter doesn't show them.
Very sort for oscilloscope.
2N3903
2N3904
Watch gains of both transistors to get better performance
LM386-N
IN - GND - OUT
BC547
BC639
BC337
L1 10 turns on 8mm diameter
1N4148
Prove AUX interface (CN)
J9
75R impedance
700mV pp
HC139
E C B
BC547
B E C
4N28
74AC77
LED
HI05L-0200
HI05L-0200
The shielding lid must have many contact flaps.
Lead CON1 and CON2/CON3/GND cables in several turns through a ferrite bead.
Slip, put or around a ferrite-stick.
Ronja Nebulus
Title
Licensed under GPL3.
Revision 20081011
Date
Sheet 1 of 1
Author
Rony Claus