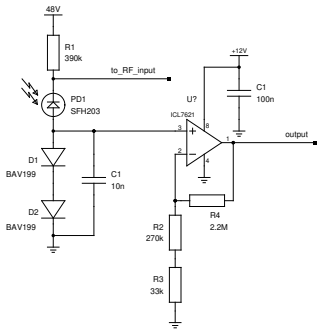

RX Frontend Builtin Luxmeter

TITLE

FILE:	Licensed under GFDL	REVISION:	20081110
PAGE	1 OF 1	DRAWN BY:	Clock