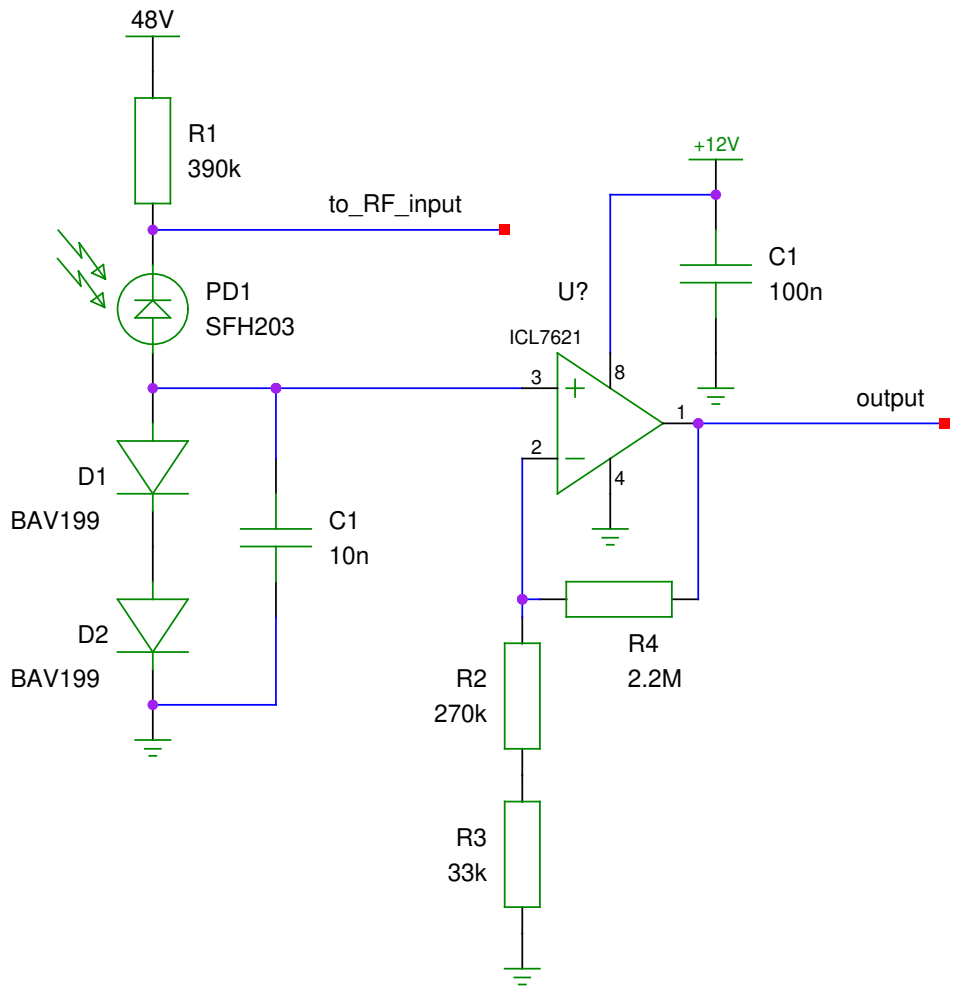

RX Frontend Builtin Luxmeter

TITLE

FILE:	Licensed under GFDL	REVISION:	20081110
PAGE 1 OF 1		DRAWN BY:	Clock