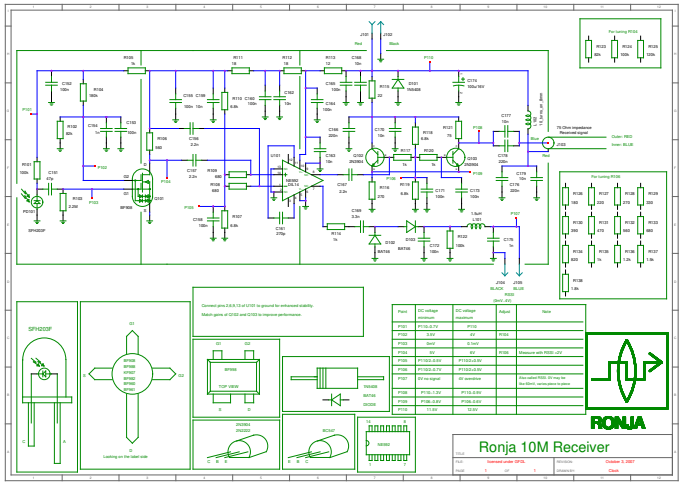
Ronja 10M Receiver
RONJA
Connect pins 2,6,8,13 of U101 to ground for enhanced stability.
Match gains of Q102 and Q103 to improve performance.
Leading on the label side
Pand | DC voltage minimum | DC voltage maximum | Adjust | Note
P101 | P110-0.7V | P110 | | |
P102 | 3.8V | 4V | R104 | |
P103 | 0mV | 0.1mV | | |
P104 | 9V | 9V | R106 | Measure with R103 +2V |
P105 | P110-0.6V | P110-0.6V | | |
P106 | P110-0.7V | P110-0.6V | | |
P107 | 0V no signal | 0V sensitive | | Also called R103. 0V may be the Bias Block, varies place to place |
P108 | P110-1.3V | P110-0.6V | | |
P109 | P108-0.6V | P108-0.6V | | |
P110 | 11.9V | 12.5V | | |
Ronja 10M Receiver
Licensed under GFDL
October 3, 2007
Clock