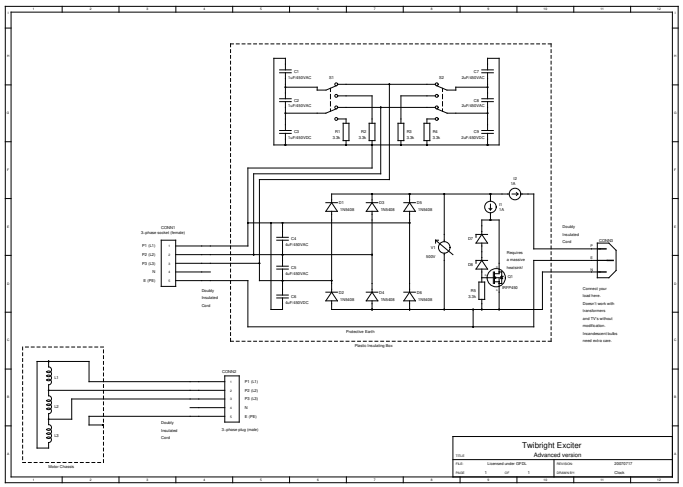

C1
1uF/600VAC
C2
1uF/600VAC
C3
1uF/600VAC
S1
S2
R1
3.3k
R2
3.3k
R3
3.3k
R4
3.3k
C7
2uF/600VAC
C8
2uF/600VAC
C9
2uF/600VAC
U2
1A
D1
1N4408
D2
1N4408
D3
1N4408
D4
1N4408
D5
1N4408
D6
1N4408
D7
D8
D9
R5
3.3k
V1
6000
Requires
a massive
heatsink!
Q1
RFP40
CONN1
3-phase socket (female)
P1 (L1)
P2 (L2)
P3 (L3)
N
E (PE)
Doubly
Insulated
Cord
Protective Earth
Parallel Insulating Box
Doubly
Insulated
Cord
CONN2
Connect your
load here.
Doesn't work with
transformers
and TV's without
modification.
Incandescent bulbs
need extra care.
CONN3
P1 (L1)
P2 (L2)
P3 (L3)
N
E (PE)
3-phase plug (male)
Doubly
Insulated
Cord
L1
L2
L3
Motor Chassis
Twibright Exciter
Advanced version
Title
File:
Licensed under GPDL
Revision:
20070717
Page:
1
of
1
Sheets:
Clock