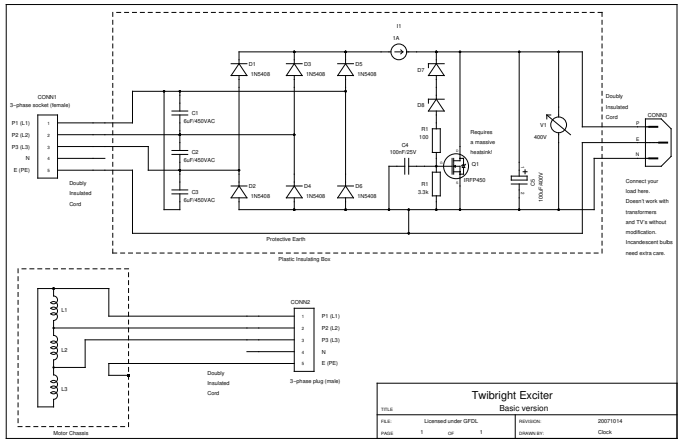


| | | | |
|---|---|---|---|
| TITLE | Twibright Exciter<br>Basic version | | |
| FILE | Licensed under GFDL | REVISION: | 20071014 |
| PAGE 1 OF 1 | | DRAWN BY: | Clock |