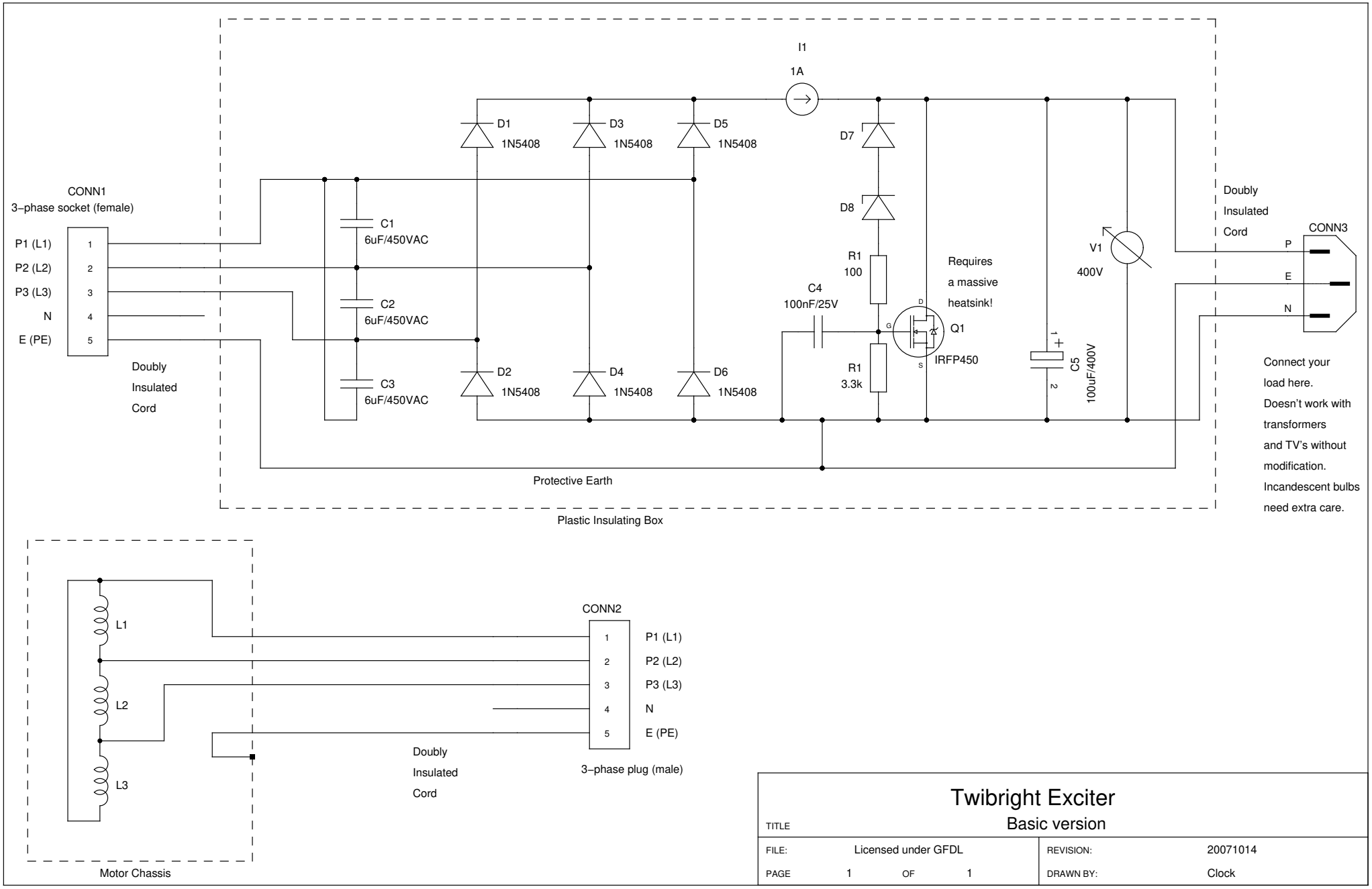

Twibright Exciter

TITLE: Basic version

FILE:	Licensed under GFDL	REVISION:	20071014
PAGE 1 OF 1		DRAWN BY:	Clock