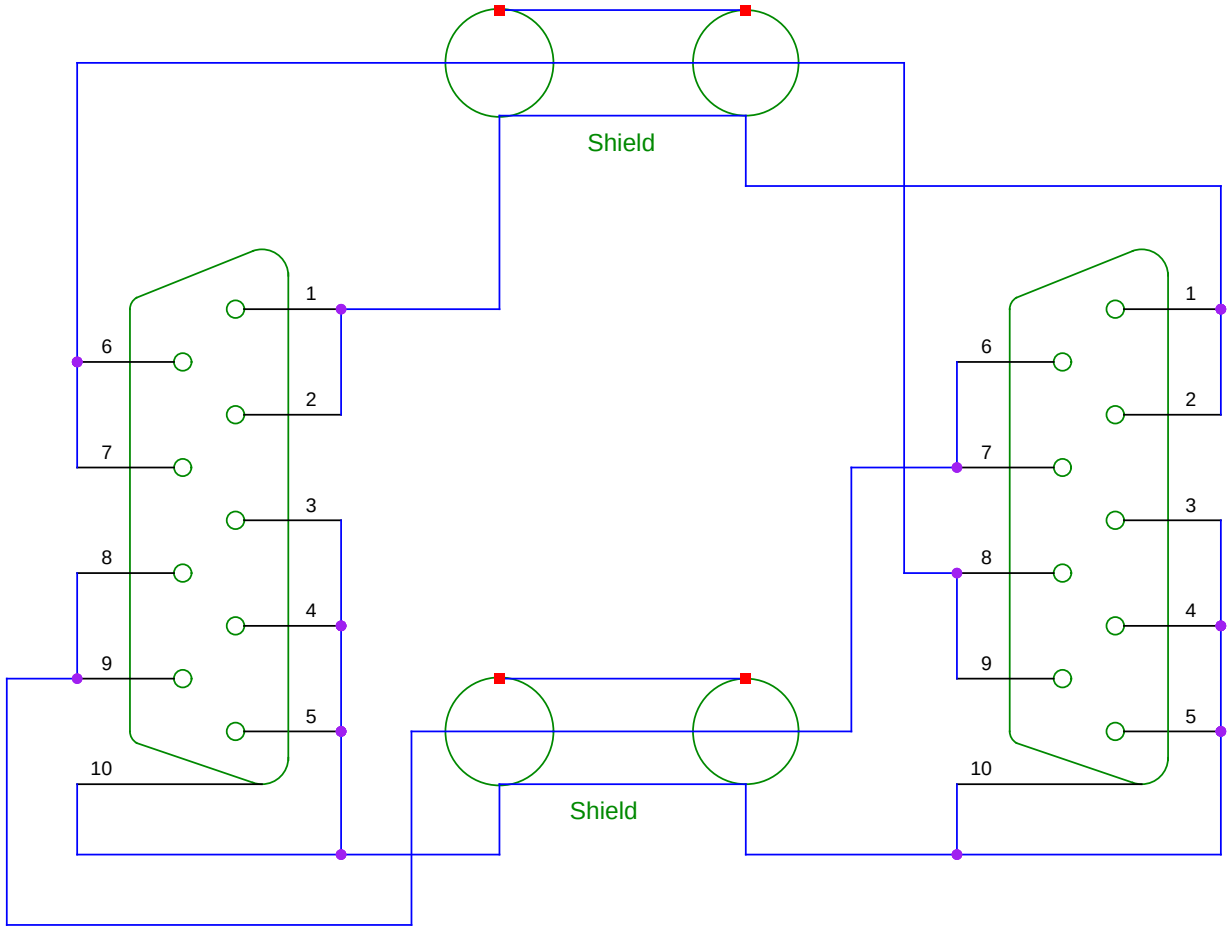

RONJA

Crossover cable

TITLE

FILE:	Licensed under GFDL	REVISION:	20060630
PAGE 1 OF 1		DRAWN BY:	Clock