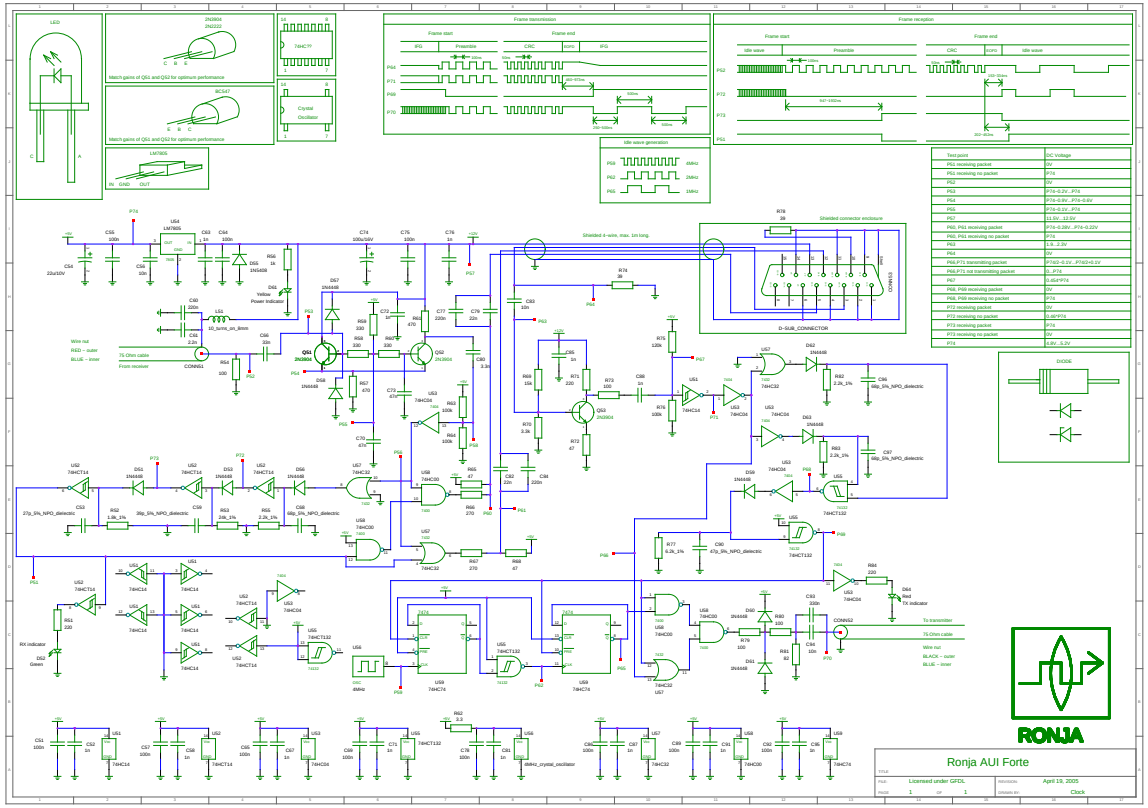

Test point	DC Voltage
PS1 receiving packet	0V
PS1 receiving no packet	P74
PS2	0V
PS3	P74–0.2V...P74
PS4	P74–0.9V...P74–0.6V
PS5	P74–0.1V...P74
PS7	11.5V...12.5V
P60, P61 receiving packet	P74–0.38V...P74–0.22V
P60, P61 receiving no packet	P74
P63	1.9...2.2V
P64	5V
P66,P71 transmitting packet	P74/2–0.1V...P74/2+0.1V
P66,P71 not transmitting packet	0...P74
P67	0.45xP74
P68, P69 receiving packet	0V
P68, P69 receiving no packet	P74
P72 receiving packet	5V
P72 receiving no packet	0.48*P74
P73 receiving packet	P74
P73 receiving no packet	0V
P74	4.8V...5.2V