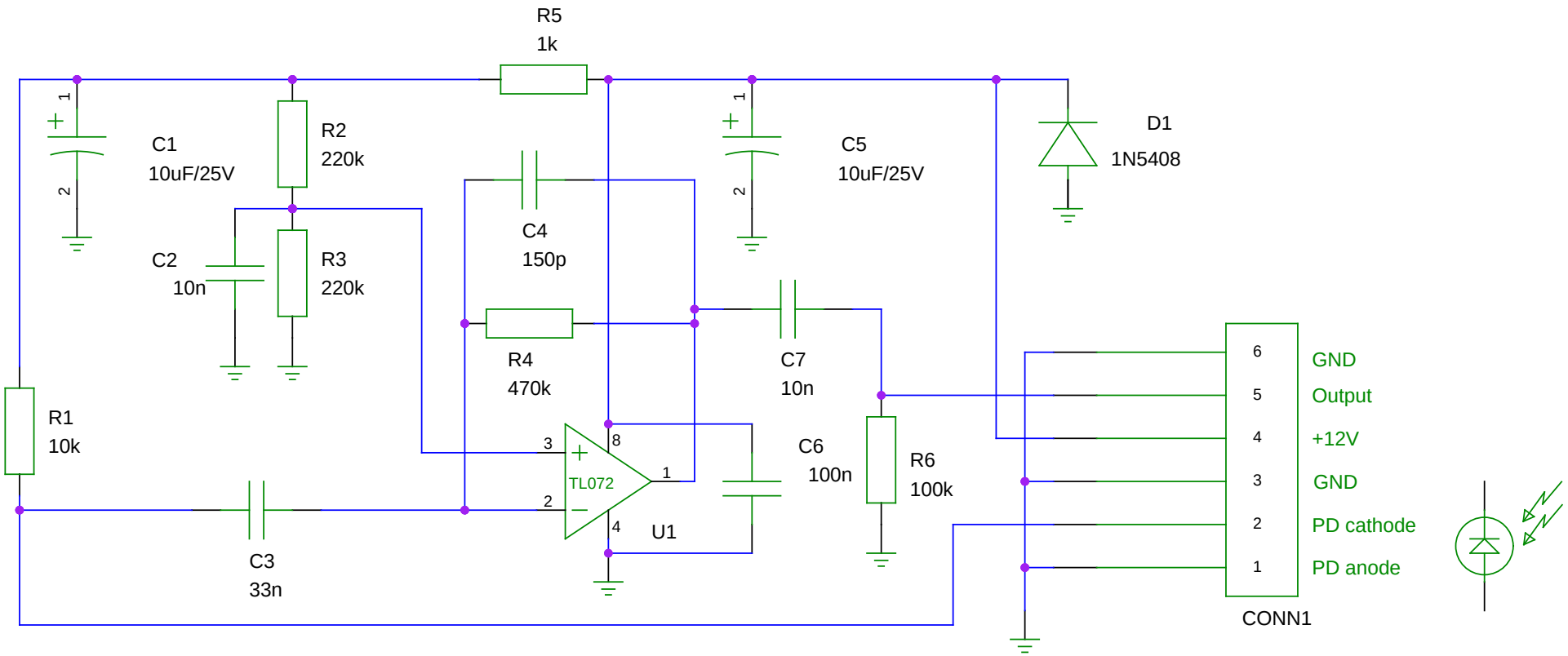

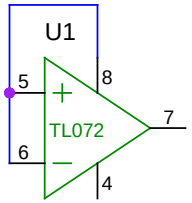

Ronja Audiofire

TITLE

FILE:	Licensed under GFDL	REVISION:	20040710
PAGE 1 OF 1		DRAWN BY:	Clock, Twibright Labs