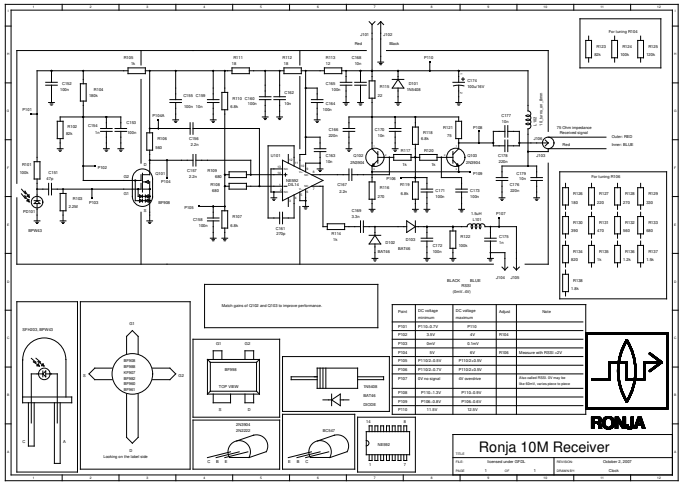
Ronja 10M Receiver
Match gains of Q102 and Q103 to improve performance.
Leading on the label side
RONJA