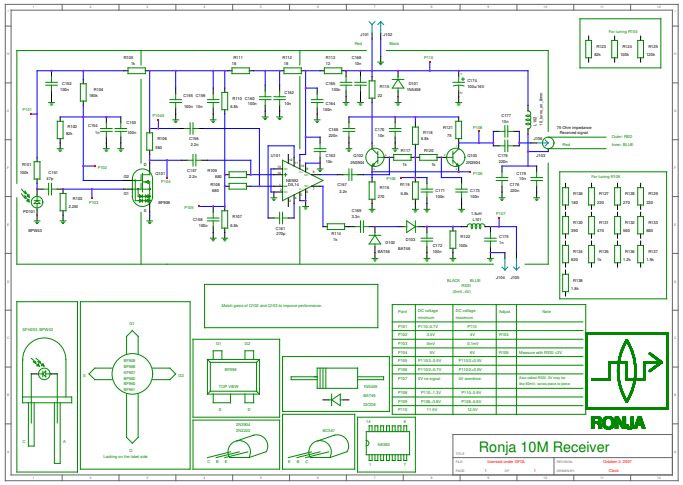

Point	DC voltage minimum	DC voltage maximum	Adjust	Note
P101	P110-0.7V	P110		
P102	3.6V	4V	P104	
P103	3mV	0.1mV		
P104	5V	6V	P106	Measure with P103 -2V
P105	P103-0.6V	P103-0.5V		
P106	P103-0.7V	P103-0.6V		
P107	0V no signal	0V sensitive		Also called RSSI. 0V may be the Short, not no place to place
P108	P110-1.3V	P110-0.8V		
P109	P108-0.8V	P108-0.6V		
P110	11.8V	12.6V		