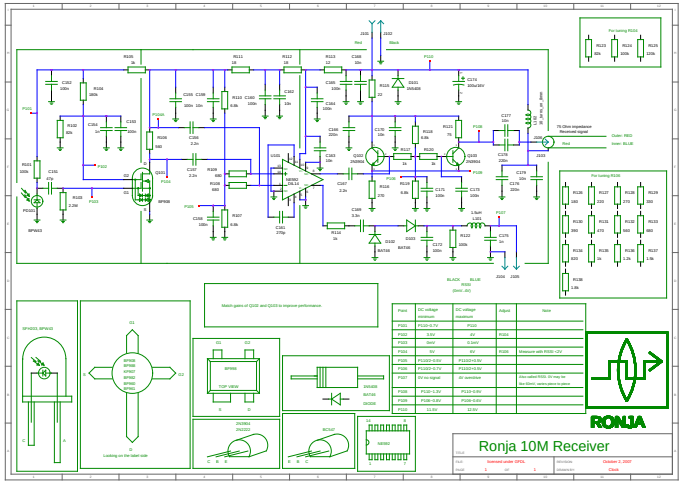

Point	DC voltage minimum	DC voltage maximum	Adjust	Note
P101	P102+0.7V	P102		
P102	3.6V	4V	R104	
P103	0mV	0.1mV		
P104	5V	5V	R105	Measure with RSSI=2V
P105	P110+0.6V	P110+0.9V		
P106	P110+0.7V	P110+0.9V		
P107	5V no signal	0V overdrive		Also called RSSI. 5V may be
P108	P110+1.5V	P110+5V		See Bom, series pins in place
P109	P108+0.8V	P108+0.6V		
P112	11.5V	12V		