Hood

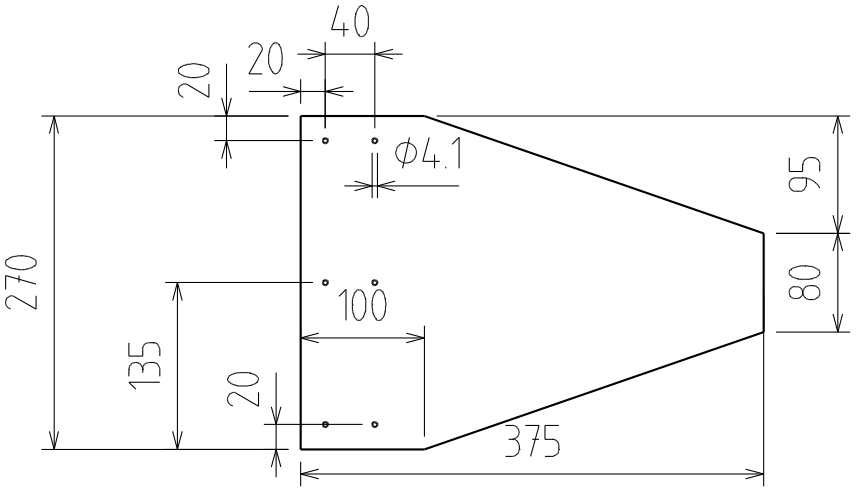

Material: metal tin, 0.5-0.7mm thickness