Slide Cover

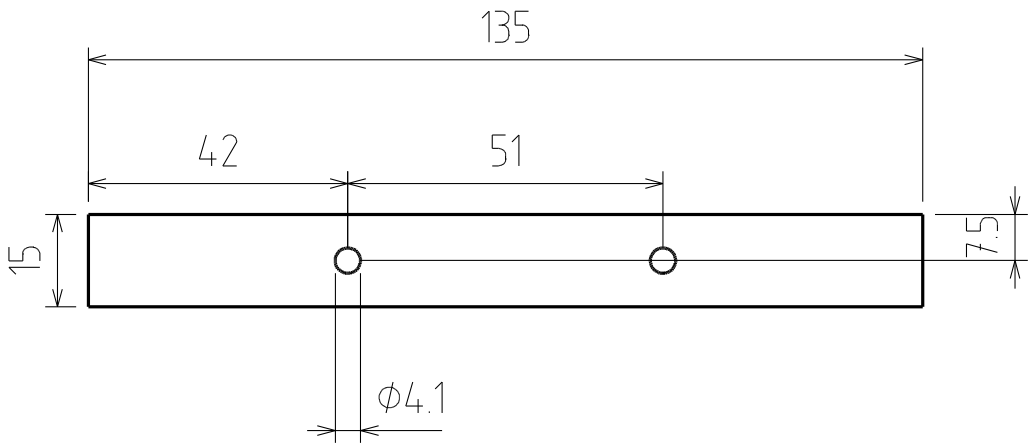

Material: 0.5-1mm metal tin