Cathode of LED1 must be connected near LED case to metal of the case to ensure proper cooling.

Match gains of both transistors to get better performance

Match gains of both transistors to get better performance

With signal at CON1		
	AC	DC
P1	600mVpp...700mVpp	0V
P2	600mVpp...700mVpp	P8-0.1V...P8
P3	0mVpp...100mVpp	P8-0.6V...P8-0.5V
P4	0mVpp...80mVpp	P8-0.1V...P8
P5	2V...4.0Vpp	P8-2.2V...P8-2.0V
P6	P8/2-0.4...P8/2+0.2Vpp	P8/2-0.5V...P8/2+0.1V
P7	21mA...130mAp	42mA...84mA
P8	0...50mVpp	4.6V...5.2V
P9	0...30mVpp	11.6V...12.6V

Without signal at CON1		
	AC	DC
P1	0V	0V
P2	0V	P8-0.1V...P8
P3	0V	P8-0.6V...P8-0.6V
P4	0V	P8-0.1V...P8
P5	0V	P8-0.2V...P8
P6	0V	P8-0.1V...P8
P7	0mA	0mA
P8	0V	4.6V...5.2V
P9	0V	11.6V...12.6V

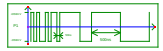

LD must be screwed to the metallic case to prevent overheating.

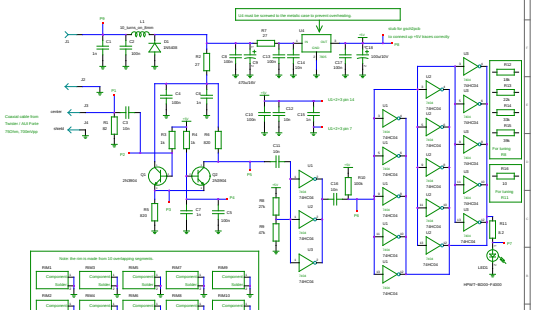

Note: the net is made from 10 overlapping segments.

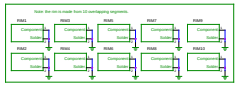

The shielding lid must have many contact flaps.

Ronja 10M Metropolis Transmitter

Title			
File	licensed under GPL	Revision	March 26, 2005
Sheet	1 of 1	Attention	Check