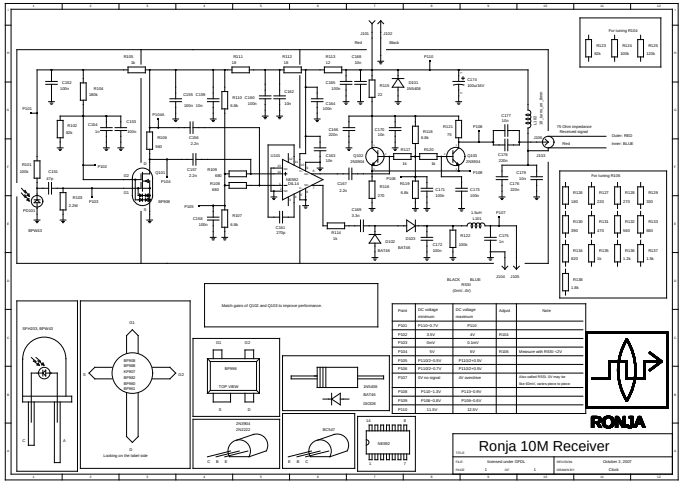
Ronja 10M Receiver
Licensed under GPL3.
October 2, 2007
Check
RONJA
Match gains of Q102 and Q103 to improve performance.
Pins
DC voltage minimum
DC voltage maximum
Adjust
Note
P101
P102
P103
P104
P105
P106
P107
P108
P109
P110
P111
P112
P101-0.7V
P101
3.6V
4V
3mV
0.1mV
5V
5V
P104
Measure with RSSI =2V
P110/2-0.5V
P110/2+0.5V
P112/2-0.7V
P112/2+0.7V
0V no signal
0V overdrive
Also called RSSI. 0V may be
like Rssi1, series pins in pairs
P116-1.3V
P116-0.6V
P128-0.8V
P128-0.6V
11.5V
12.5V
Pot tuning R102
Pot tuning R106
BFW10, BPW20
Looking on the label side
2N3904
2N3702
SC747
NE592
BAT46
BAT48
DIO206
BLACK
BLUE
RSSI
(Gerr..de)
Red
Black
Outer: RED
Inner: BLUE
75 Ohm impedance
Received signal
Red
BPW20
BPW34
BPW77
BPW82
BPW83
BPW85
TOP VIEW
S
D
G
C
B
E
A
K